Original-

Manual

YMC Pilot with heating/cooling jacket

Low pressure chromatography column

In order to avoid personal injuries and damage to equipment, please read this manual carefully and act on the recommendations given. Keep this manual accessible for the user at all times.

Version 1.6

03.05.2021

YMC Europe GmbH

Schöttmannshof 19
46539 Dinslaken, Deutschland
+49 02064 427-0
Info@ymc.de
www.ymc.de

Contents

1 Information on manual 5
1.1 General....5
1.2 Explanation of warnings....5
1.3 Structure of instructions 6
1.4 Guidelines 6
1.5 Figures 6

2 Safety....7
2.1 Intended use 7
2.2 General safety instructions 7
2.3 Personnel requirements....7
2.4 Personal protective equipment 8

3 Specifications and overview....9
3.1 Fields of application 9
3.2 Specifications....9
3.2.1 Specifications – AB version 10
3.2.2 Specifications – SR version 10
3.3 Chemical resistance....11
3.3.1 Chemical resistance – AB version 12
3.3.2 Chemical resistance – SR version....13
3.4 Overview 14
3.4.1 Adjustable end piece....15
3.4.2 Piston front....16
3.4.3 Fixed end piece....17
3.4.4 Column body....18

4 Delivery 19
4.1 Delivery contents....19
4.2 Delivery inspection 19

5 Requirements for operation....20
5.1 Safety instructions for use....20
5.2 Glass column set up....21
5.3 Pressure test 21

6 Operation 23
6.1 Tightening and loosening the O-ring....23
6.2 Piston adjustment....23
6.3 Removal of end pieces....24
6.3.1 Removal of adjustable end piece....24
6.3.2 Removal of fixed end piece....24
6.4 Glass column packing....25
6.4.1 Slurry preparation 26
6.4.2 Slurry column packing under flow....27
6.4.3 Slurry column packing with sedimentation....28
6.5 Column test and release criteria 29
6.6 Packing adapter 30
6.7 Glass column unpacking....31

7 Cleaning and maintenance....32
7.1 Notes for Cleaning-In-Place (CIP) 33
7.2 Cleaning and maintenance plan 34
7.3 Cleaning....35

7.4 Replacement of spare parts 37
7.4.1 Frit replacement 37
7.4.2 O-ring plunger replacement 37
7.4.3 Replacing the glass body 38

8 Troubleshooting 39

9 Storage, packaging and transport 41
9.1 Storage 41
9.2 Transport 41

10 Disposal 42

11 Appendix 43
11.1 Spare parts column body 43
11.2 Spare parts end pieces, AB version 44
11.3 Spare parts end pieces, SR Version 45
11.4 Index 46

1 Information on manual

1.1 General

This manual includes important messages and information for the intended use of this glass column. The manual must be kept accessible for the user at all times.

In order to avoid injuries and damages, this manual should be read carefully prior to use and the recommendations given should be acted upon.

1.2 Explanation of warnings

Warnings are highlighted by coloured signal word fields. Always read the full text of the warning in order to effectively protect yourself from damage!

The following signal word fields are marked by different colours and signal words for distinct security levels:

⚠ **DANGER**

Disregarding this warning will result in death or serious injuries.

⚠ **WARNING**

Disregarding this warning may result in death or serious injuries.

⚠ **CAREFUL**

Disregarding this warning may result in minor or moderate injuries.

ATTENTION

Disregarding this warning can result in damage to surrounding property.

Warnings are always in the same structure. They include signal word, type and source of danger, consequences of neglect and security measures / avoidance.

1.3 Structure of instructions

The instructions relate directly to an activity. They are structured in a task oriented manner. Always perform the individual steps in the order in which they are given.

Instructions are structured as follows and are marked by the corresponding levels:

▶ Aim of the instruction:

1. Action step
   ✓ Impact of the action step to check whether the step has been performed correctly.
2. Another action step.

Figures within instructions:

A figure is only related to the action step which is listed directly below the figure.

1.4 Guidelines

The following guidelines are available in this manual:

- Contents at the beginning
- Index in the end
- Name of the main Chapter in the header
- Links to other Chapters, for example “Information in this manual“ (▸Chapter 1, p. 5)
- Additional information and hints indicated with an i-symbol

---

i Example for additional information

1.5 Figures

Figures can differ in the graphical presentation from the product.

2 Safety

This section gives an overview of all the important safety aspects for the protection of personnel and for the safe and trouble-free handling of the glass column.

Other task-specific safety requirements are contained in the sections relating to the respective operation. In addition, the national and local legal and other applicable safety regulations must be observed.

2.1 Intended use

The glass columns are only to be used for the separation of substances using chromatographic techniques.

The intended use of this product must be performed with regards to the specifications ▸Chapter 3.2, p. 9. The product is only for use with liquids that have a pressure <0,5 bar above the atmospheric pressure at the intended maximum temperature (40 °C). Every use which is outside these specifications is defined as not intended use. The intended use includes the compliance with the advice and terms in the manual.

2.2 General safety instructions

In order to avoid accidents and injuries,

- operate the glass column only within its intended use.
- follow all general and special safety instructions as well as all warnings in this manual.
- follow danger signs and signs giving instructions.
- follow the rules and regulations for prevention of accidents at the site of operation.
- comply with all inspection and maintenance intervals.

2.3 Personnel requirements

The various tasks described in this manual make different demands on the qualifications and training of the persons carrying them out.

The user must:

- have competent and proficient training.
- be trained in dealing with pressure devices.
- read and fully understand this manual before using this glass column.

2.4 Personal protective equipment

In order to reduce the risks during working on the column, always use the recommended personal protective equipment.

The following protective equipment is required:

Symbol	PPE	Phase of life	Actions
	Protective gloves	Operation	Column packing Column unpacking
		Initiation	Cleaning
	Safety googles	Operation	All actions
		Initiation	Cleaning Pressure testing
	Dust mask	Operation	Slurry preparation
	Protective clothing	Operation	All actions
		Initiation	Cleaning Pressure testing

3 Specifications and overview

3.1 Fields of application

The YMC Pilot glass column is especially designed for pilot scale use. The column is compatible with common BioLC separation modes (IEX, SEC, Affinity, IMAC, HIC, MMC) as well as NP and RP mode in case the chemical resistance is given.

The columns are available in AB version (Aqueous Buffer) or SR version (Solvent Resistant). The wetted parts differ depending on the column version.

3.2 Specifications

PED* fluid group:	Group 1 referred to EU Guideline 2014/68/EU
PED* safety requirement:	Article 4.3 of EU Guideline 2014/68/EU
Available versions:	AB version: Aqueous Buffer SR version: Solvent Resistant
Column body:	Borosilicate glass 3.3 Calibrated precision glass (Duran KPG®)
Frits:	AB version: PE, 10 µm SR version: Stainless steel, 10 µm
Seals:	AB version: EPDM SR version: Kalrez®
Connection:	AB version: FEP tubing OD¼" SR version: Stainless steel capillary OD¼“
Wetted parts:	AB version: Borosilicate glass 3.3, PVDF, PTFE, EPDM, PE, FEP, PEEK SR version: Borosilicate glass 3.3, PTFE, Stainless steel, Kalrez®
Approved temperature range:	4 – 40 °C

*Pressure Equipment Directive

3.2.1 Specifications – AB version

Length glass body [mm]	500			850		
Inner diameter [mm]	100	140	200	100	140	200
Bed length [mm]	90 – 440	70 – 410	100 – 440	440 – 790	420-760	450 – 790
Column volume [L]	0.7 – 3.4	1.1 - 6.3	3.1 – 13.8	3.5 – 6.2	6.5 – 11.6	14.1 – 24.8
Maximum operating pressure [bar]	10	7	5	10	7	5
Total weight empty [kg]	32	46	65	40	59	80
Footprint [cm]	52x47	55x50	65x55	52x47	55x50	65x55
Maximum column height [mm]	1770	1740	1810	2120	2090	2160

[1]depending on packing material and packing method

3.2.2 Specifications – SR version

Length glass body [mm]	500			850		
Inner diameter [mm]	100	140	200	100	140	200
Bed length [mm]	20 - 450	20 - 440	20 – 470	330 - 800	330 - 790	370 - 820
Column volume [L]	0.2 – 3.5	0.3 – 6.7	0.6 – 14.7	2.6 – 6.2	5.1 – 12.1	11.6 – 25.7
Maximum operating pressure [bar]	10	7	5	10	7	5
Total weight empty [kg]	40	55	83	48	68	98
Footprint [cm]	52x47	55x50	65x55	52x47	55x50	65x55
Maximum column height [mm]	1790	1780	1840	2140	2130	2190

[1]depending on packing material and packing method

3.3 Chemical resistance

The chemical resistance depends on the wetted materials used ▸Chapter 3.2, p. 9.

From the resistance of the individual materials the chemical resistance of the column can be concluded.

Such statements are based on our current technical knowledge and experiences as well as on existing literature and the information from the commodity producers. These do not exempt the users of our products from their own testing.

---

i If desired solvent is not listed, YMC will be pleased to advise you.

ATTENTION

When using solvent mixtures, the resistance may differ significantly from those of the pure solvent.

3.3.1 Chemical resistance – AB version

The AB version (Aqueous Buffer) is just limited resistant against strong organic solvents. Before using organic solvents, check the chemical resistance of the wetted parts for the corresponding organic solvent.

Material / Solvent	Borosilicate glass 3.3	PVDF	PTFE	EPDM	PE	FEP	PEEK
Acetone	Good	Un-stable	Good	Good	Good	Good	Good
Acetonitrile	Good	Limited	Good	Limited	Good	Good	Good
Dihydrogen phosphate	Good	Good	Good	Good	Good	Good	Good
Cyclohexane	Good	Good	Good	Un-stable	Limited	Good	Good
Dichloromethane	Good	Limited	Good	Un-stable	Un-stable	Good	Limited
0.1 M EDTA (3%)	Good	Good	Good	Good	Good	Good	Good
1 M Acetic acid (6%)	Good	Good	Good	Good	Good	Good	Good
Ethanol	Good	Good	Good	Good	Good	Good	Good
Ethyl acetate	Good	Limited	Good	Limited	Good	Good	Good
n-Hexane	Good	Good	Good	Un-stable	Limited	Good	Good
Isopropanol	Good	Good	Good	Good	Good	Good	Good
Methanol	Good	Good	Good	Good	Good	Good	Good
2 M NaOH (8%)	Good	Good	Good	Good	Good	Good	Good
1 M HCl (4%)	Good	Good	Good	Good	Good	Good	Good
8 M Urea (36%)	Good	Good	Good	Good	Good	Good	Good
1 M NaCl	Good	Good	Good	Good	Good	Good	Good
0.5 M Na_2SO_4	Good	Good	Good	Good	Good	Good	Good

YMC recommends avoiding the following chemicals:

- Strong oxidizing solvents
- Halogenated compounds
- Chlorinated solvents
- Aromatic compounds (e.g. toluene)
- High concentrations of strong acids
- THF

3.3.2 Chemical resistance – SR version

The SR version (Solvent Resistant) is designed for the operation with strong organic solvents. When using water, buffers and salts in combination with extreme pH-values, it need to be considered that stainless steel parts are in the flow path.

Material / Solvent	Borosilicate glass 3.3	PTFE	Stainless steel	FEP	Kalrez
Acetone	Good	Good	Good	Good	Good
Acetonitrile	Good	Good	Good	Good	Good
Dihydrogen phosphate	Good	Good	Limited	Good	Good
Cyclohexane	Good	Good	Good	Good	Good
Dichloromethane	Good	Good	Good	Good	Good
0.1 M EDTA (3%)	Good	Good	Good	Good	Good
1 M Acetic acid (6%)	Good	Good	Limited	Good	Good
Ethanol	Good	Good	Good	Good	Good
Ethyl acetate	Good	Good	Good	Good	Good
n-Hexane	Good	Good	Good	Good	Good
Isopropanol	Good	Good	Good	Good	Good
Methanol	Good	Good	Good	Good	Good
2 M NaOH (8%)	Good	Good	Limited	Good	Good
1 M HCl (4%)	Good	Good	Unstable	Good	Good
8 M Urea (36%)	Good	Good	Good	Good	Good
1 M NaCl	Good	Good	Limited	Good	Good
0.5 M Na_2SO_4	Good	Good	Limited	Good	Good

YMC recommends avoiding the following chemicals:

- Strong oxidizing solvents
- Halogenated compounds
- Chlorinated solvents
- High concentrations of strong acids

3.4 Overview

All parts listed for the column body and the end pieces are in the appendix.

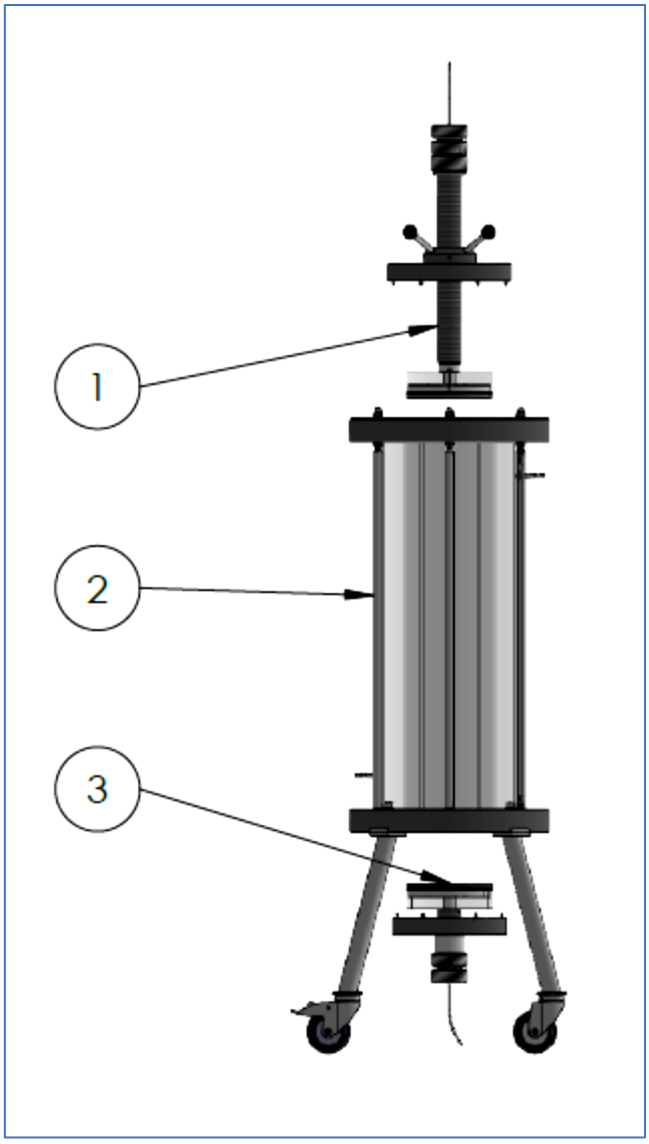

The glass column consists of the adjustable end piece (1), the column body (2), the fixed end piece (3) and the column stand. The column stand is fixed to the column body. The adjustable and the fixed end piece can be removed from the column body.

The column is equipped with a heating/cooling jacket made of borosilicate glass 3.3.

3.4.1 Adjustable end piece

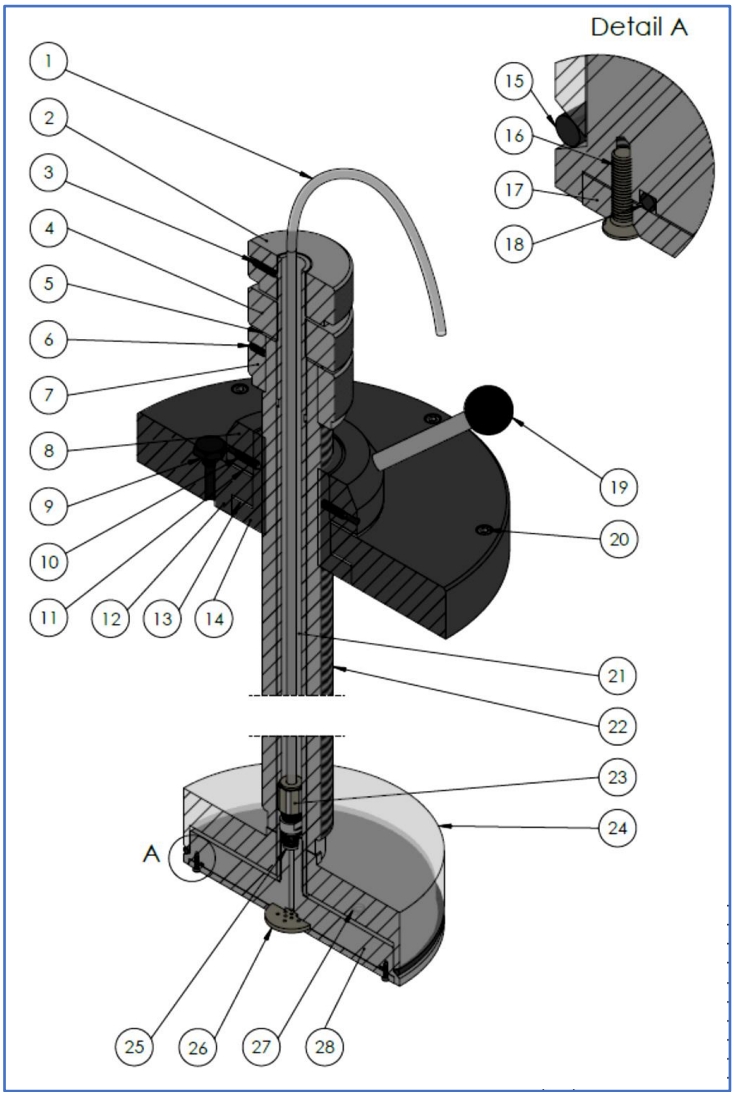

1	Tubing	15	O-ring plunger
2	Connection nut inner spindle	16	Countersunk screw
3	Set screw	17	Frit
4	Tension nut	18	O-ring frit
5	Teflon disc	19	Handle bar
6	Set screw	20	Cylinder screw
7	Connection nut outer spindle	21	Internal spindle (AEP)
8	Adapter rotary handle	22	External spindle (AEP)
9	Shutter screw	23	Connector
10	Set screw	24	Pressure piece
11	Sliding disc big	25	Sealing washer
12	Closing disc (AEP)	26	Distributor plate
13	Sliding disc small	27	Spring
14	Hub	28	Plunger

The adjustable end piece consists of a closing disc and the piston. The piston consists of the pressure piece, the internal and external spindle, the plunger, the frit and the O-ring. The tubing passes through the internal spindle to the plunger. With the handle bar in the closing disc, the piston can be adjusted up and down when the O-ring is tightened. By turning the tension nut, the O-ring is compressed or relaxed and this way tightened or loosened. The closing disc (AEP) is connected with the column disc (AEP) via cylinder screws.

3.4.2 Piston front

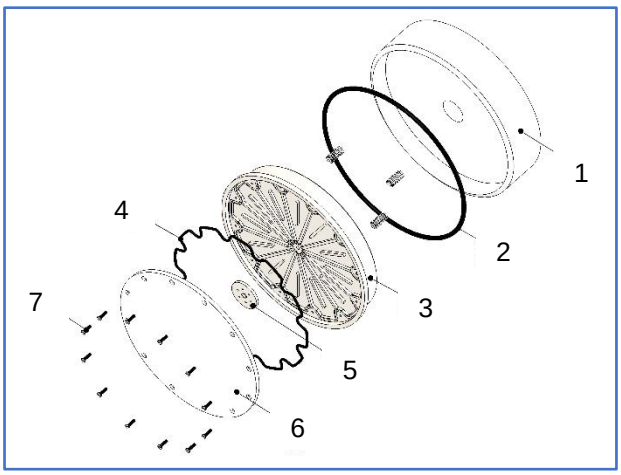

1	Pressure piece	5	Distributor plate
2	O-ring plunger	6	Frit
3	Plunger	7	Countersunk screw
4	O-ring frit		

The piston front design is the same for the adjustable and the fixed end pieces. The piston front consists of the plunger (3) and the pressure piece (1) which is located on springs on the plunger. The frit (6) is fixed with countersunk screws in the plunger. For sealing, an O-ring is fitted under the frit. The O-ring plunger is between the plunger and the pressure piece.

3.4.3 Fixed end piece

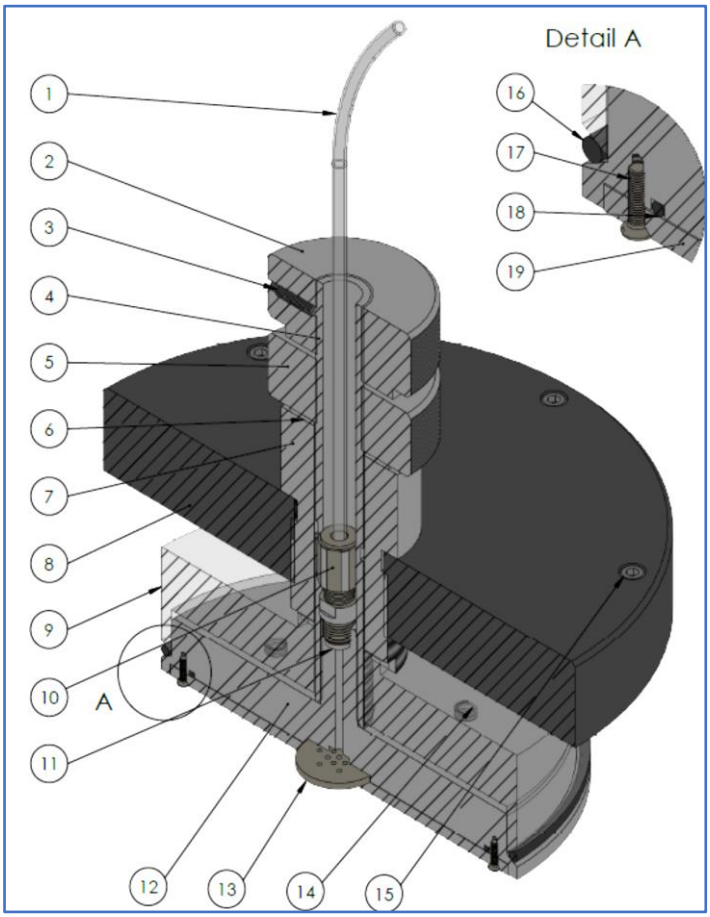

1	Tubing	11	Sealing washer
2	Connection nut inner spindle	12	Plunger
3	Set screw	13	Distributor plate
4	Internal spindle (FEP)	14	Spring
5	Tension nut	15	Cylinder screw
6	Teflon disc	16	O-ring plunger
7	External spindle (FEP)	17	Countersunk screw
8	Closing disc (FEP)	18	O-ring frit
9	Pressure piece	19	Frit
10	Connector		

The fixed end piece consists of a closing disc and the piston. The piston consists of the pressure piece, the internal and external spindle, the plunger, the frit and the O-ring. The tubing passes through the internal spindle to the plunger. By turning the tension nut, the O-ring is compressed or relaxed and this way the seal is tightened or loosened. The closing disc (FEP) is connected with the column disc (FEP) via cylinder screws.

3.4.4 Column body

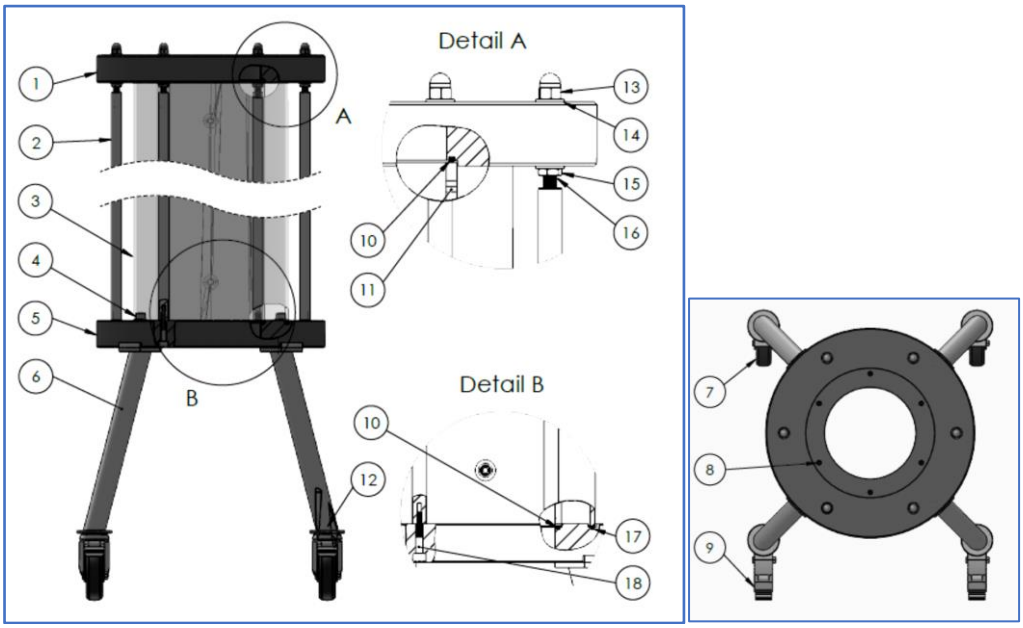

1	Column disc (AEP)	10	O-ring glass body
2	Rod	11	Glass body
3	Cooling jacket	12	Cylinder screws
4	Cylinder screw	13	Cap nut
5	Column disc (FEP)	14	Washer
6	Main pillar	15	Nut
7	Castor	16	Set screw
8	Threaded insert	17	O-ring cooling jacket
9	Castor	18	Cylinder screws

The glass body and the cooling jacket are fixed between the column disc (AEP) and the column disc (FEP) by the rods. The column body is equipped with wheels. The two end pieces can be inserted on top and bottom of the column body. The closing discs of the end pieces are connected with the column discs via cylinder screws.

The heating/cooling jacket is equipped with two hose fittings as inlet and outlet for the heating/cooling liquid.

4 Delivery

The YMC Pilot glass columns are shipped as pre-assembled units. A documentation folder is delivered with every glass column. Based on the label on the column it is always possible to determine the column version. Using the serial number, the column can be identified clearly. The product code includes information of inner diameter, length, frit porosity and the column version.

4.1 Delivery contents

- Glass column
- Documentation folder:
  - Brochure
  - Manual
  - Overview drawings
  - YMC Quality Control / Certificate of Quality Control

    If ordered especially / separately:
  - Material certificates / statements of conformity

4.2 Delivery inspection

YMC recommends retaining and storing the original packaging and the foam cushion so that the column can always be shipped safely.

Delivery inspection

▶ Delivery inspection should be performed as follows:

1. Check the delivery for visible transport damage.
2. Check the delivery for the completeness of parts.
3. Compare the column description on the glass body with the data of the delivery note.

Transport damages

▶ Procedure, if you observe any visible transport damage:

1. Refuse or reserve acceptance of the delivery.
2. Record the transport damage on the delivery note of the transporter or in the transport documents.
3. Inform YMC Europe GmbH and / or the responsible supplying agent.

5 Requirements for operation

5.1 Safety instructions for use

⚠ **WARNING**

Use correctly matched protective clothing when working with the glass column.

⚠ **WARNING**

Do not put the glass column under gas pressure.

⚠ **CAREFUL**

Operate the column only with pressures within the stated specifications. Otherwise there is a risk of injury and material damage.

⚠ **CAREFUL**

The temperature range which is used must not exceed / fall below the given specifications.

⚠ **WARNING**

Make sure that the wheel brakes are activated during the entire operation or storage time.

ATTENTION

Use the column only with chemicals that are proven applicable with the wetted materials.

ATTENTION

Make sure that the fluids used are always clean and free from particles, as this can lead to blockages.

5.2 Glass column set up

Devices required:

- Collection vessel

▶ The glass column is set up as follows:

1. Make sure that the glass column is standing on fixed ground.
2. Make sure that the glass column is standing vertical in the final operating place.
3. Put the collection vessel below the column.

5.3 Pressure test

⚠ **WARNING**

Operation of pressure tests

Eye or skin injuries possible due to solvent leakage or incorrectly sealed connectors.

▶ Perform the pressure test behind a safety screen.

▶ During work on the glass column, wear the prescribed personal protective equipment.

⚠ **WARNING**

Glass column under high pressure

Eye or skin injuries possible due to remaining pressure in the tubing or in the glass column.

▶ Stop the pump during work on the glass column.

▶ During work on the glass column, wear the prescribed personal protective equipment.

A pressure test is used to check the tightness of both the seals in the glass column and also the tubing connectors. Before using the column for chromatographic applications, it is recommended that a pressure test is performed to verify the correct assembly.

Prior to delivery of the column, the column has been tested according to the standard procedure described below. The relevant certificate is located in the documentation folder.

Standard procedure pressure test

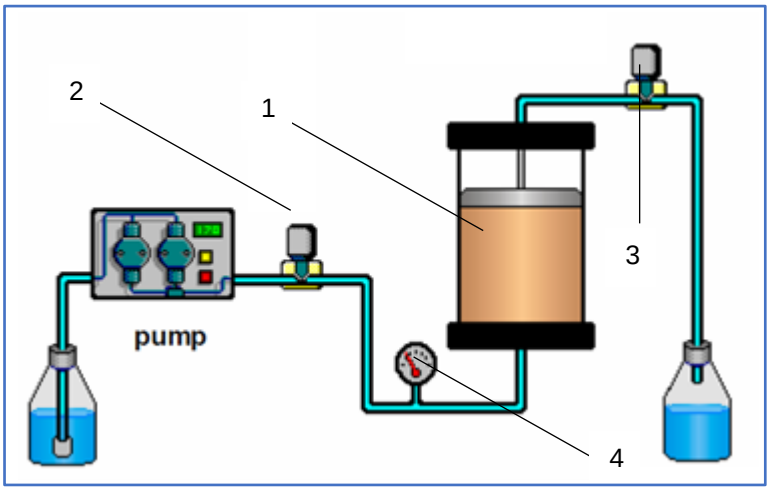

1 Glass column
2 Gate valve
3 Gate valve
4 Pressure gauge

---

i For columns with heating / cooling jacket, the pressure test is performed with the heating / cooling jacket filled with water. The leakage test of the heating / cooling jacket is performed pressure free and filled with water. The detection of leakages is done visually after 30 minutes testing time.

▶ The pressure test should be performed as follows:

1. Assemble the system according to the schematic overview of a pressure test. Fill the heating / cooling jacket with water.
2. Tighten the O-rings on both end pieces.
3. Fill the glass column with water (AB version) / isopropanol (SR version) (bottom-up).
4. When the column is filled with liquid completely, close gate valve 3.
5. Build up the testing pressure with a flow rate of 25-50 mL/min.
   ✓ The testing pressure is the pressure limit of the column plus 10% (100 mm ID = 11 bar | 140 mm ID = 7.7 bar | 200 mm ID = 5.5 bar | 300 mm ID = 3.3 bar).
6. As soon as the testing pressure is reached, stop the pump and close gate valve 2.
7. Perform the pressure test for 15 minutes.

☑ Compare the pressure after 15 minutes with the initial pressure. The column is leak proof if the pressure has decreased by less than 5%.

---

i Leakages at the piston are often related to impurities trapped in the seals.

---

6 Operation

⚠ **WARNING**

Risk of explosion

Severe injuries possible due to glass splinters.

▶ Never put the glass column under gas pressure!

In order to guarantee safe operation, the glass column must be used for the intended use only (▸Chapter 2.1, p. 7).

6.1 Tightening and loosening the O-ring

▶ The O-ring is tightened as follows:

1. Hold the internal spindle or the connection nut inner spindle.
2. Turn the tension nut clockwise in the direction of the external spindle or the connection nut outer spindle. The O-ring is squeezed.
   ✓ O-ring is sealed when a constant black line appears in the glass body.

▶ The O-ring is loosened as follows:

1. Hold the internal spindle or the connection nut inner spindle.
2. Turn the tension nut anticlockwise in the direction of the connection nut inner spindle. The O-ring is loosened.
   ✓ O-ring is not sealed anymore if the black line disappears.

6.2 Piston adjustment

▶ The piston is adjusted as follows:

1. Tighten the O-ring of the adjustable end piece until the O-ring is sealed.
   ✓ O-ring is sealed when a constant black line appears in the glass body.
2. By turning the handle bars, the piston moves up and down.

6.3 Removal of end pieces

Devices required:

- clean and soft surface
- hex-wrench

⚠ **WARNING**

Weight of the adjustable and fixed end piece

Severe injuries and damage of the glass body possible.

► Wear the prescribed personal protective equipment.

► Take care that the end pieces are removed in alignment with the column axis.

6.3.1 Removal of adjustable end piece

► The adjustable end piece is removed as follows:

1. Turn the adjustable end piece in up-direction as far as it will go.
2. Loosen the O-ring of the adjustable end piece by turning the tension nut in up direction.
3. Remove the cylinder screws from the closing disc (AEP) with the hex wrench.
4. Remove the adjustable end piece vertically from the column body and put it on a clean, soft surface.

6.3.2 Removal of fixed end piece

► The fixed end piece is removed as follows:

1. Tighten the O-ring of the fixed end piece.
2. Remove the cylinder screws from the closing disc (FEP) with the hex wrench.
3. Loosen the O-ring of the fixed end piece.
4. Remove the fixed end piece vertically from the column body and put it on a clean, soft surface.

6.4 Glass column packing

⚠ **CAREFUL**

Packing material

Eye and skin injuries possible through contact with packing material.

► Wear the prescribed personal protective equipment.

ATTENTION

Adapt the packing method to the manufacturer's packing material information. Improper packing conditions can cause damage or completely destroy the material.

ATTENTION

Avoid the use of a magnetic stirrer! Depending on the nature of the packing material, stirring can cause mechanical damage to the material. Refer to the information provided by the manufacturer of the packing material.

Two different procedures are common for slurry packing the column:

- under flow,
- with sedimentation.

6.4.1 Slurry preparation

⚠ CAREFUL

Formation of dust with dry packing material

Lung irritation possible if packing material is inhaled.

- ► Read the material safety data sheet from the packing material manufacturer.
- ► Wear a dusk mask.

ℹ The use of a more dilute liquid slurry simplifies the column packing. The total column volume of the slurry should not exceed the maximum volume of the column.

ℹ The removal of fines decreases the column back pressure and so improves the performance of the packed column.

► The slurry is prepared as follows:

1. Mix the solvent or buffer with the appropriate amount of packing material in a suitable container (see manufacturer´s recommendations).
   - ✓ The total volume of the slurry must be less than the maximum column volume.
   - ✓ The amount of packing material determines the final bed length.
2. Mix the slurry with a stirring rod until the slurry is homogenous and avoid introduction of air bubbles.
3. Check if the material is suitable for ultrasonication (see manufacturer´s recommendations).
   - ✓ If the material is suitable for ultrasonication, degas the slurry in an ultrasonic bath.
   - ✓ If the material is not suitable for ultrasonication, let the material settle.
4. Let the degassed slurry settle.
5. If fines are visible on the surface of the slurry, remove them.

6.4.2 Slurry column packing under flow

► The column is packed with the slurry method under flow as follows:

1. Remove the adjustable end piece ▸Chapter 6.3.1, p. 24.
2. Tighten the O-ring of the fixed end piece ▸Chapter 6.1, p. 23.
3. Connect the pump / system with the tubing to the fixed end piece.
4. Start the pump.
5. Fill the glass body with solvent or buffer until 2-3 cm above the frit of the fixed end piece (bottom-up).
   - ✓ This ensures that no air is trapped under or inside the frit.
6. Close the valve on the tubing of the fixed end piece.
7. Connect the pump to the adjustable end piece.
8. Flush the piston of the adjustable end piece with slurry solvent until the frit in the adjustable end piece is wetted completely.
9. Disconnect the pump from the adjustable end piece.
10. Pour the homogenous and / or degassed slurry into the glass body.
11. Rinse the inner wall of the column body with slurry solvent to remove particles from the walls.
    - ✓ By removing particles from the inner wall of the column body, a correct seal with the O-ring is guaranteed.
12. Fill the glass column up to the edge of the column body with slurry solvent.
13. Loosen the O-ring of the adjustable end piece.
14. Insert the adjustable end piece with loosened O-ring into the column.
    - ✓ By inserting the adjustable end piece with loosened O-ring into the solvent, the risk of air bubbles below the frit is reduced.
    - ✓ Check that no air bubbles are below the frit.
15. Turn the cylinder screws with the hex-wrench through the closing disc into the column disc. This way, the column is closed.
16. Tighten the O-ring of the adjustable end piece.
17. Open the valve in the tubing on the adjustable end piece.
18. Turn the piston of the adjustable end piece in the down direction until the tubing is completely filled with liquid.
    - ✓ The tubing is now free of air.
19. Connect the pump with the tubing to the adjustable end piece.
20. Open the valve in the tubing of the fixed end piece.
21. Start the flow (top-down).
22. Increase the flow rate stepwise until the desired pressure / flow rate is reached. Wait after every step until the pressure is constant. Afterwards, the flow rate can be further increased.
    - ✓ Consider the manufacturer´s recommendations for the packing material.
    - ✓ The flow rate should be considerably (>20%) higher than the required operating flow rate.
    - ✓ The column bed is visually compressed.

23. Check and mark the bed length frequently.
24. If the final bed length is reached, stop the pump.
25. Turn the piston of the adjustable end piece in down direction until the column bed is reached.
26. Start the pump.
27. Check, if the column bed compresses further. A dead volume would occur.
28. If a dead volume occurs, stop the pump and repeat steps 22 to 25.
29. If no dead volume occurs, the glass column is released ▸Chapter 6.5, p. 29.
30. Equilibrate the glass column with the desired eluent and test the column performance.

6.4.3 Slurry column packing with sedimentation

► The column is packed via the sedimentation slurry method as follows:

1. Remove the adjustable end piece ▸Chapter 6.3.1, p. 24.
2. Tighten the O-ring of the fixed end piece ▸Chapter 6.1, p. 23.
3. Connect the pump / system with the tubing to the fixed end piece.
4. Start the pump.
5. Fill the glass body with solvent or buffer until 2-3 cm above the frit in the fixed end piece (bottom-up).
   - ✓ This ensures that no air is trapped under or inside the frit.
6. Close the valve in the tubing of the fixed end piece.
7. Pour the homogenous and / or degassed slurry into the glass body.
8. Rinse the inner wall of the column body with slurry solvent for removal of particles.
   - ✓ By removing particles from the inner wall of the column body, a correct seal with the O-ring is guaranteed.
9. Do not move the glass column until packing is completed.
   - ✓ YMC recommends covering the open column body during sedimentation with some plastic film.
10. Wait until the packing material has settled (sedimentation).
    - ✓ Depending on the packing material, this can take several hours.
11. Fill the glass column up to the edge of the column body with slurry solvent.
12. Connect the pump to the adjustable end piece.
13. Flush the piston of the adjustable end piece with slurry solvent until the frit in the adjustable end piece is wetted completely.
14. Stop the pump.
15. Insert the adjustable end piece with loosened O-ring into the column.
    - ✓ By inserting the adjustable end piece with loosened O-ring into the solvent, the risk of air bubbles below the frit is reduced.
    - ✓ Check that no air bubbles are below the frit.

16. Turn the cylinder screws with the hex-wrench through the closing disc into the column disc. This way, the column is closed.
17. Tighten the O-ring of the adjustable end piece.
18. Open the valve in the tubing on the adjustable end piece.
19. Turn the piston of the adjustable end piece in the down direction until the tubing is completely filled with liquid.
    - ✓ The tubing is now free of air.
20. Connect the pump with the tubing of the adjustable end piece.
21. Open the valve in the tubing of the fixed end piece.
22. Start the flow (top-down).
23. Increase the flow rate stepwise until the desired pressure / flow rate is reached. Wait after every step until the pressure is constant. Afterwards, the flow rate can be further increased.
    - ✓ Consider the manufacturer´s recommendations for the packing material.
    - ✓ The flow rate should be considerably (>20%) higher than the required operating flow rate.
    - ✓ The column bed is visually compressed.
24. Check and mark the bed length frequently.
25. If the final bed length is reached, stop the pump.
26. Turn the piston of the adjustable end piece in the down direction until the column bed is reached.
27. Start the pump.
28. Check, if the column bed is further compressed. A dead volume would occur.
29. If a dead volume occurs, stop the pump and repeat step 23 to 26.
30. If no dead volume occurs, the pilot column is released ▸Chapter 6.5, p. 29.
31. Equilibrate the glass column with the desired eluent and test the column performance.

6.5 Column test and release criteria

The column test and the release criteria are selected with regards to the later application requirements. The preparation of the required specifications for the final use of a column or for the purification of a target molecule is determined individually. YMC will gladly support you.

6.6 Packing adapter

Due to the increased maximum column volume, the slurry concentration can be reduced. This way, the packing process is simplified.

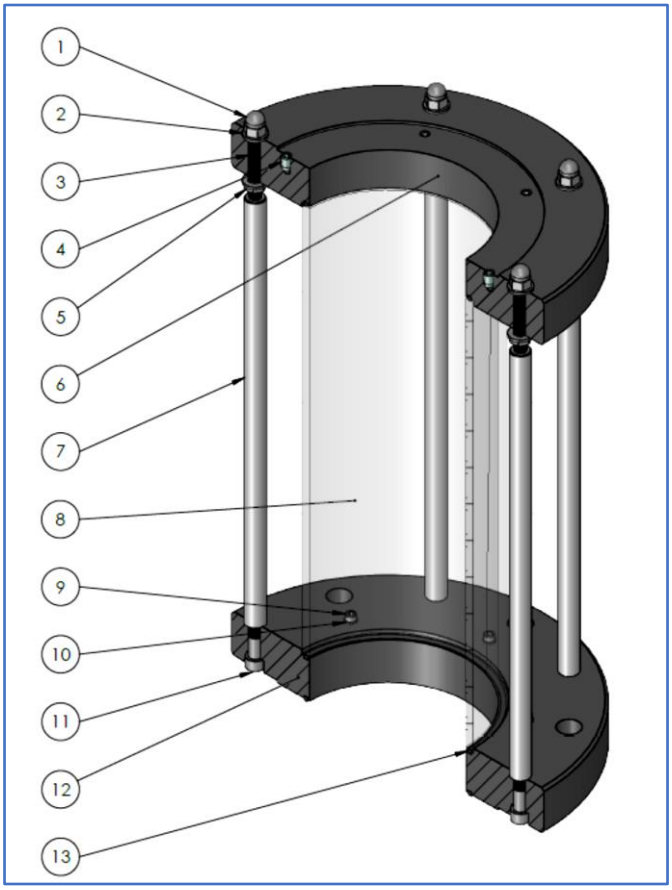

1	Cap nut	8	Glass body
2	Washer	9	Cylinder screw
3	Set screw	10	Washer
4	Threaded insert	11	Cylinder screw
5	Nut	12	Coupling disc
6	Column disc (AEP)	13	O-ring glass body
7	Rod		

► The packing adapter is assembled as follows:

1. Remove the adjustable end piece ▸Chapter 6.3.1, p. 24.
2. Put the pre-assembled packing adapter with the O-ring glass body on the notch in the column body.
3. Fix the packing adapter by putting the washers over the rods. Tighten them with the cap nuts which kept the column disc (AEP) in position before.
4. The packing adapter is ready to use.

6.7 Glass column unpacking

⚠ **WARNING**

Glass column under high pressure

Eye or skin injuries possible due to remaining pressure in the tubing or in the glass column.

- ► Stop the pump during working on the glass column.
- ► While working on the glass column, wear the prescribed personal protective equipment.

⚠ **CAREFUL**

Packing material

Eye and skin injuries possible through contact with packing material.

- ► Wear the prescribed personal protective equipment.

► The glass column is unpacked under flow as follows:

1. Disconnect the pump from the fixed end piece.
2. Remove the fixed end piece ▸Chapter 6.3.2, p. 24.
3. Put a collection vessel below the column body.
4. Connect the pump to the tubing from the adjustable end piece.
5. Start the pump.
   - ✓ Because of the flow, the packing material is pressed out of the column body into the collection vessel.
6. Clean the glass column ▸Chapter 7.3, p. 35.

7 Cleaning and maintenance

⚠ **WARNING**

Incorrect maintenance

Severe injuries when used after incorrect maintenance are possible, if the column or the column parts do not withstand the operating pressure.

► Only authorised and qualified personnel should carry out the maintenance.

⚠ **WARNING**

Incorrect replacement of spare parts

Severe injuries due to breakage possible if unauthorised spare parts are used.

► Use only the manufacturer authorised spare parts.

⚠ **WARNING**

Faulty maintenance of the pilot column

Severe injuries due to deterioration possible.

► Meet maintenance intervals.

► Perform the maintenance as described.

ℹ Consumable parts lists are included in the appendix.

7.1 Notes for Cleaning-In-Place (CIP)

⚠ **CAREFUL**

Packing material

Eye and skin injuries possible through contact with packing material.

► Wear the prescribed personal protective equipment.

ATTENTION

Cleaning with inappropriate solvents

Material damage possible due to corrosion, leaching or deformation.

► Check the chemical resistance of the wetted parts for the cleaning method before the CIP procedure.

With the cleaning-in-place procedure, a packed glass column can be cleaned without unpacking or dismantling. Depending on the contamination, three different procedures can be used.

1. Regeneration,
2. Sterilisation,
3. Depyrogenation.

Regeneration

Regeneration removes inorganic and organic contamination, which binds to the chromatography matrix and substantially affects the capacity and resolution of the column. Commonly these are: lipids, pyrogens, protein aggregates, pigments, polyphenols or metal complexes.

Sterilisation

Sterilisation is the removal and / or destruction of microorganisms and spores that will contaminate the purified product. The most common method is the treatment with sodium hydroxide, acetic acid or ethanol solution.

Depyrogenation

Depyrogenation includes the removal of endotoxins, which can bind to the chromatographic material or the column hardware (frits, tubing, etc.) and which can contaminate the purified product.

Cleaning methods for CIP

Treatment	Type of contamination	Sterilisation	Depyrogenation
Pepsin, pH 1.5 - 2	Proteolysis of adsorbed proteins	No	No
Non-ionic detergents (Triton X-100, Tween 80)	Removal of hydrophobic proteins and lipids	No	No
Cationic detergents pH 9 - 11	Removal of hydrophobic proteins and lipids	No	Partly
Urea, 6 – 8 M	Removal of protein aggregates	No	Unknown
1 – 100 mM EDTA, pH depending on the stationary phase	Removal of metal complexes	No	No
0.1 - 1 M NaOH	Removal of bounded hydrophobic proteins, lipopolysaccharides	Good	Good
0.5 - 1 M acetic acid in 60% ethanol	Removal of lipids, pigments, lipopolysaccharides, and other lipophilic substances	Very good	Good

7.2 Cleaning and maintenance plan

The specified maintenance plan here is to be regarded as a general recommendation. Depending on the frequency of use and specific application, the appropriate maintenance plan and the intervals must be defined locally.

Interval	Maintenance
After every operation	Clean the glass column.
Daily	Check the column bed, adjust the piston if necessary. Check all tubing and connections for leakage. Fix loosened cylinder screws again or replace tubing and connectors.
Every 3 months	Check the O-ring on the adjustable end piece. • If damaged, replace it. Check the O-ring on the fixed end piece. • If damaged, replace it.
Every 6 months	Check the frit in the adjustable end piece. • If damaged, replace it ▸Chapter 7.4.1, p. 37. Check the frit in the fixed end piece. • If damaged, replace it ▸Chapter 7.4.1, p.37.

7.3 Cleaning

⚠ WARNING

Glass column under high pressure

Eye or skin injuries possible due to the remaining pressure in the tubing or in the glass column.

- ► Stop the pump while working on the glass column.
- ► When working on the glass column, wear the prescribed personal protective equipment.

⚠ CAREFUL

Packing material

Eye and skin injuries possible through contact with packing material.

- ► Wear the prescribed personal protective equipment.

Devices required:

- Wetted and lint-free rags
- Collection vessel
- Solvent for column body and adjustable end piece cleaning ▸Chapter 3.3, p. 11.
- Cleaning agent for cleaning the outer wall of the column body

Authorised cleaning agents for cleaning the outer wall of the column body:

- commercially available dishwashing cleaners
- aliphatic hydrocarbons
- aliphatic alcohols
- aromatic hydrocarbons
- aldehydes
- diluted and weak acids
- bases

▶ The glass column is cleaned as follows:

1. Remove the fixed end piece ▸Chapter 6.3.2, p. 24.
2. Clean the fixed end piece with an appropriate solvent and / or flush the fixed end piece with 1 M sodium hydroxide.
3. Clean the outer wall of the column body.
4. Clean the column body with an authorised cleaning agent and a wetted, lint-free rag.
5. Put a collection vessel below the column body.
6. Connect the pump to the tubing from the adjustable end piece.
7. Start the pump.
8. Flush the column body with an appropriate solvent and / or with 1 M sodium hydroxide.
9. Stop the pump.
10. Disconnect the pump from the tubing from the adjustable end piece.
11. Remove the adjustable end piece from the column body.
12. Let the column body and the end pieces dry.

7.4 Replacement of spare parts

ATTENTION

Faulty assembly

Damage to the glass body possible due to faulty assembly.

- ▶ Take care during the assembly of the glass body that the maximum torque is not exceeded: 3.0 Nm for columns with 100 mm ID and heating/cooling jacket, 5.0 Nm for columns with 140 mm ID and heating/cooling jacket and 5.7 Nm AB version or 15 Nm SR version for columns with 200 mm ID and heating/cooling jacket.
- ▶ Assemble the cylinder screws in a diagonal pattern and always tighten on the opposite sites.
- ▶ Take care during assembly of the glass body that all parts are correctly aligned.

7.4.1 Frit replacement

▶ The frits in the adjustable and fixed end pieces are replaced as follows:

1. Remove the end piece ▸Chapter 6.3, p. 24.
2. Remove the screws in the frit.
3. Remove the frit.
4. Insert the new frit.
5. Tighten the screws in the frit.

7.4.2 O-ring plunger replacement

▶ The O-ring plunger is replaced as follows:

1. Remove the end piece ▸Chapter 6.3, p. 24.
2. Loosen the O-ring plunger completely.
3. Remove the O-ring over the plunger in the direction of the frit.
4. Place the new O-ring over the plunger so that it is in the notch between plunger and pressure piece.

7.4.3 Replacing the glass body

ATTENTION

Faulty assembly

Damage to the glass body possible due to faulty assembly.

- ► Take care during the assembly of the glass body that the maximum torque is not exceeded: 3.0 Nm for columns with 100 mm ID and heating/cooling jacket, 5.0 Nm for columns with 140 mm ID and heating/cooling jacket and 5.7 Nm AB version or 15 Nm SR version for columns with 200 mm ID and heating/cooling jacket.
- ► Assemble the cylinder screws in a diagonal pattern and always tighten on the opposite sites.
- ► Take care during assembly of the glass body that all parts are correctly aligned.

Devices required:

- cylinder screw key, torque wrench

The cooling jacket is replaced in the same way as the glass body.

► The glass body is dismantled as follows:

1. Remove the adjustable end piece ▸Chapter 6.3.1, p. 24.
2. Loosen the cap nuts stepwise half turn. Do it diagonally: Loosen cap nuts always on opposite sites.
3. Remove the cap nuts and washers.
4. Remove the column disc from the column body. Remove the O-ring glass body.
5. Remove the glass body carefully.
6. Position the new glass body on the O-ring glass body.
7. Check that the glass body is concentric with the O-rings.
8. Put the O-ring glass body on the top edge of the glass body.
9. Align the column disc with the rods and put it on the glass body. The threaded rods are guided through the holes in the column disc.
10. Check that the O-ring is in the notch of the column disc.
11. Check that the glass body is concentric with the column disc.
12. Adjust the counter nuts and washers below the column disc to a distance of approx. 5 mm below the column disc.
13. Put the washers over the threaded rods on top of the column disc.
14. Tighten the cap nuts stepwise. Do it diagonally: Tighten cap nuts always on opposite sites. Tighten them until you reach the required torque.
15. Tighten the cap nuts and the corresponding counter nuts with a cylinder screw key. Do it on opposite sites.

8 Troubleshooting

⚠ WARNING

Incorrect maintenance
Severe injuries during operation after incorrect maintenance possible if the column or column parts do not withstand the operating pressure.

► Only authorised and qualified personnel should carry out the maintenance.

⚠ WARNING

Incorrect replacement of spare parts
Severe injuries due to breakage possible, if authorised spare parts are not used.

► Use only the manufacturer authorised parts.

Fault description	Possible cause	Solution
Dead volume occured	Exceeding the maximum allowable pressure of the column packing	► If dead volume occurs, proceed as follows: 1. Stop the pump. 2. Readjust the piston of the adjustable end piece.
	Stressed column packing	
Peak shape of the eluted substances deteriorates	Dead volume at the column inlet	See fault description “Dead volume occurred“
	Partially clogged frit	Frit replacement ▸Chapter 7.4, p. 37.
	Separation performance of the stationary phase altered by impurities	Wash the stationary phase. Contact also the manufacturer of the packing material.
	Stationary phase mechanically destroyed	Replace packing material
Air in the column	Degassing or evaporation of solvent during storage	New column conditioning. Possibly new packing material is necessary.
Exceptional pressure rise during operation	Valve circuit incorrect	Check valve positions
	Clogged frit	Frit replacement ▸Chapter 7.4, p. 37.
	Over-tightened fixing screws	Replace fixing screw and clamping tubing, cut the end of the tubing.
Pressure drop during operation	Leakage from tubing or fitting between pump and column	Check tubing and connections
	Empty solvent reservoir	Refill solvents

Fault description	Possible cause	Solution
Solvent drips from the column	Column body leaks	► If the column body leaks, proceed as follows: 1. Visual check, if solvent leaks between glass body and O-ring. 2. Check contact surface of the glass body and the sealing surface for impurities. 3. Check the torque and the concentric arrangement of the parts.
	Tubing connection leaks	► If the tubing leaks, proceed as follows: 1. Tighten the fixing screws. 2. Check the tightness of tubing connection. 3. New column conditioning.

i If faults occur which are not listed here, please contact YMC for support.

9 Storage, packaging and transport

⚠ **WARNING**

Solvents in the glass column

Dangers possible due to liquids leaking form the column during transportation.

► Unpack and clean the column before transport.

9.1 Storage

ℹ For storage of packed columns, the chemical resistance of the wetted parts and of the packed stationary phase (please contact the manufacturer) should be considered.

The glass column should be stored as follows:

- unpacked
- cleaned
- dry
- empty

9.2 Transport

We recommend the use of the original wooden box for transportation. If you are no longer in possession of the box, please pack the column in a similar container.

► The column is packaged as follows:

1. Unpack the glass column ▸Chapter 6.7, p. 31.
2. Clean the glass column ▸Chapter 7.3, p. 35.
3. Insert the adjustable and fixed end piece.
4. Wrap the glass body in bubble wrap.
5. Fix the wheels to the base of the wooden box.
6. Make sure that there is a minimum distance of 100 mm from the outer wall.
7. Fix the glass column in the wooden box with bubble wrap.
8. Attach appropriate warning signals to the box (e.g. “Caution breakable glass” and “Top”)

10 Disposal

For the disposal of the glass column it has to be disassembled and disposed according to the national and other applicable environmental regulations.

11 Appendix

11.1 Spare parts column body

Pos.	ID [mm]	Part No.	Description	Material
1	100	PI100/500	Glass body	Borosilicate glass 3.3
2	100	PI100/500/K	Heating/cooling jacket	Borosilicate glass 3.3
3	100	PI100/850	Glass body	Borosilicate glass 3.3
4	100	PI100/850/K	Heating/cooling jacket	Borosilicate glass 3.3
5	140	PI140/500	Glass body	Borosilicate glass 3.3
6	140	PI140/500/K	Heating/cooling jacket	Borosilicate glass 3.3
7	140	PI140/850	Glass body	Borosilicate glass 3.3
8	140	PI140/850/K	Heating/cooling jacket	Borosilicate glass 3.3
9	200	PI200/500	Glass body	Borosilicate glass 3.3
10	200	PI200/500/K	Heating/cooling jacket	Borosilicate glass 3.3
11	200	PI200/850	Glass body	Borosilicate glass 3.3
12	200	PI200/850/K	Heating/cooling jacket	Borosilicate glass 3.3
13	100	PI100AB103E	O-ring glass body	EPDM
14	140	PI140AB103E	O-ring glass body	EPDM
15	200	PI200AB103E	O-ring glass body	EPDM
16	100	PI100AB104E	O-ring heating/cooling jacket	EPDM
17	140	PI140AB104E	O-ring heating/cooling jacket	EPDM
18	200	PI200AB104E	O-ring heating/cooling jacket	EPDM

11.2 Spare parts end pieces, AB version

Pos.	ID [mm]	Part No.	Description	Material
1	100, 140, 200	PT4,35FE6,35	Tubing	FEP
2	100	PI100AB100E-1	O-ring plunger	EPDM
3	100, 140, 200	PI001-1.4404	Spring	Stainless steel 1.4404
4	100, 140, 200	M3x12 mm	Countersunk screw (frit)	PEEK
5	100	PI100AB115PE/10	Frit	PE
6	100	PI100AB102E	O-ring frit	EPDM
7	100, 140, 200	PI034-AB	Connector	PVDF/PEEK/PTFE
8	100, 140, 200	PI034-DS	Sealing washer (connector)	PTFE
9	140	PI140AB100E	O-ring plunger	EPDM
10	140	PI140AB115PE/10	Frit	PE
11	140	PI140AB102E	O-ring frit	EPDM
12	200	PI200AB100E	O-ring plunger	EPDM
13	200	PI200AB115PE/10	Frit	PE
14	200	PI200AB102E	O-ring frit	EPDM

11.3 Spare parts end pieces, SR Version

Pos.	ID [mm]	Part No.	Description	Material
1	100, 140, 200	SS4,35NA6,35	Capillary	Stainless steel 1.4404
2	100	PI100SR100K	O-ring plunger	Kalrez®
3	100, 140, 200	PI001-1.4404	Spring	Stainless steel 1.4404
4	100, 140, 200	M4x8 – 1.4404	Countersunk screw (frit)	Stainless steel 1.4404
5	100	PI100SR110SS/10	Frit	Stainless steel 1.4404
6	100	PI100SR102K	O-ring frit	Kalrez®
7	100, 140, 200	PI034-SR	Connector	Stainless steel 1.4404
8	100, 140, 200	PI034-DS	Sealing washer (connector)	PTFE
9	140	PI140SR100K	O-ring plunger	Kalrez®
10	140	PI140SR110SS/10	Frit	Stainless steel 1.4404
11	140	PI140SR102K	O-ring frit	Kalrez®
12	200	PI200SR100K	O-ring plunger	Kalrez®
13	200	PI200SR110SS/10	Frit	Stainless steel 1.4404
14	200	PI200SR102K	O-ring frit	Kalrez®

11.4 Index

C

CIP 33
Cleaning 33
Cleaning-In-Place 33

D

Delivery contents 19
Disposal 42

F

Frit replacement 37

G

Glass body replacement 38

P

Packaging 41
Packing 25
Packing adapter 30
Personal protective equipment 8
Pressure test 21
Protective equipment 8

R

Resistance, chemical 11

S

Signal word 5
Signal word field 5
Slurry 26
  Slurry preparation 26
  Slurry method sedimentation 28
  Slurry method under flow 27
Storage 41

T

Transportation 41

U

Unpacking 31

W

Warnings 5
Warning messages 6
Warning notices 5